Diritti riservati All rights reserved

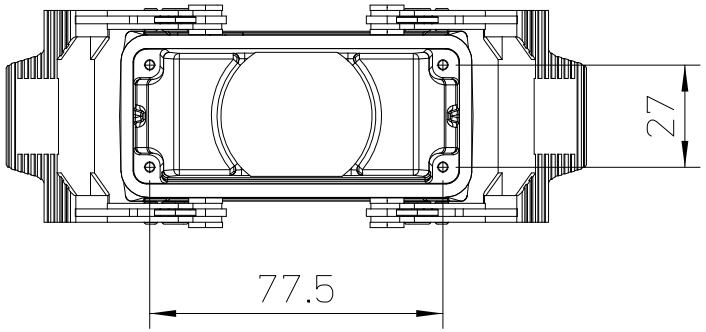

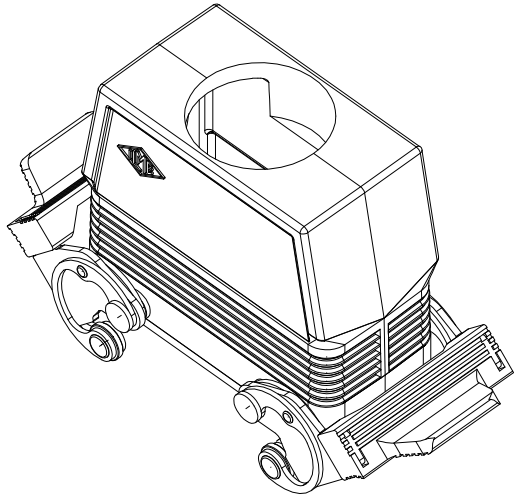

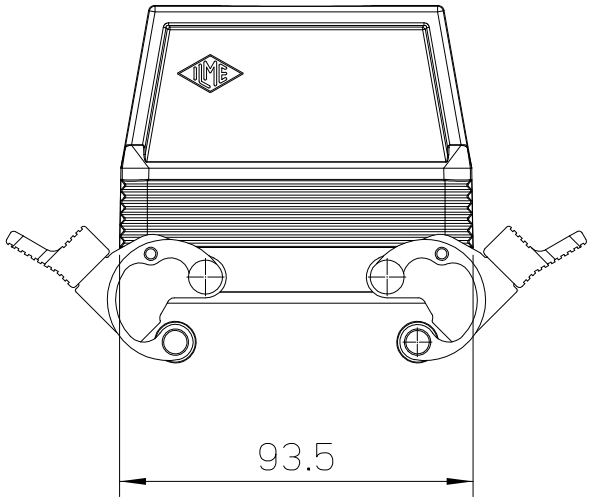

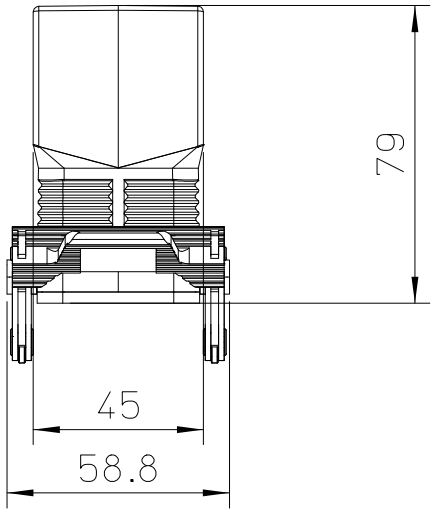

dimensions in mm	MFV 16 G40	Scale
Date 10/11/16	Hood, with M40 entry	1:2
Sign. C. Mainini		